GV-PTZ010D 10x D1 H.264 PTZ IP Camera

- 1/4" CCD image sensor
- Dual streams from H.264, MJPEG and MPEG4
- Electronic Day/Night function
- Up to 30 fps at 704 x 480
- Up to 25 fps at 704 x 576
- 10x optical zoom lens
- 10x digital zoom
- Pan and tilt (Pan: -175° ~ 175° ; Tilt: -45° ~ 90°)
- Built-in / external microphone
- 2-way audio
- One sensor input and alarm output
- Micro SD/SDHC Card Slot
- Input-triggered Preset points
- Motion Detection
- Privacy mask
- IP address filtering
- DC 12 V / AC 24 V / PoE
- Supports iPhone, iPad, Android & 3GPP
- 28 languages on Web interface

* No SD/SDHC card slot & local storage function for Argentina.

The GV-PTZ010D camera is a ceiling-mount device that provides panning, tilting and zooming functions. The camera is designed to monitor a wide area and also to focus on a specific part on the live view when suspicious events occur. There are two models:

Model	Model No.	Description
GV-PTZ010D	GV-PTZ010D-N	NTSC, IPCAM, 10x Optical Zoom, D1, H.264
	GV-PTZ010D-P	PAL, IPCAM, 10x Optical Zoom, D1, H.264

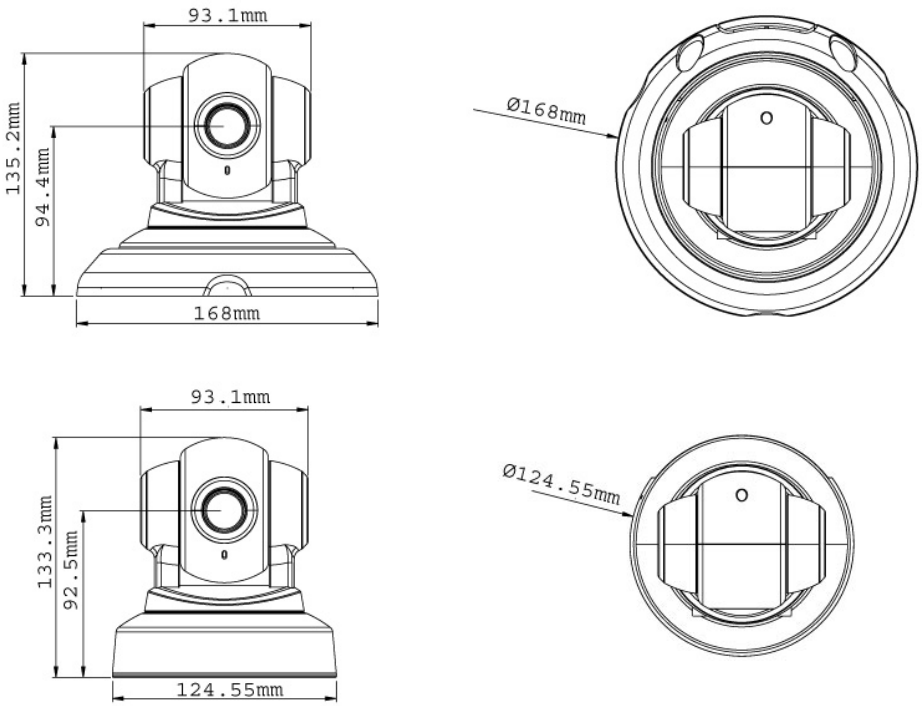

SPECIFICATIONS

Camera			
Model Name		GV-PTZ010D-N	GV-PTZ010D-P
Image Sensor		1/4" CCD image sensor	
Picture Elements		704 (H) x 480 (V)	704 (H) x 576 (V)
Minimum Illumination	Color	2.5 Lux (F/1.8)	
	B/W	0.07 Lux (F/1.8)	
Shutter Speed		Automatic, Manual (1/60 ~ 1/120,000 sec)	Automatic, Manual (1/50 ~ 1/120,000 sec)
White Balance		Automatic, Manual (3200K ~ 9600K)	
Lens			
Day/Night		Yes (electronic)	
Focal Length		4.2 ~ 42 mm	
Maximum Aperture		F/1.8 ~ F/2.9	
Image Format		1/4"	
Angle of View	Diagonal	56.4°	
	Horizontal	46.4°	
	Vertical	35.6°	
Operation	Focus	Auto Focus	
	Zoom	100x (10x Optical, 10x Digital)	
	Iris	Fixed	
Operation			
Video Format		NTSC	PAL
Video Compression		H.264, MPEG4, MJPEG	
Video Stream		Dual Streams from H.264, MPEG4 and MJPEG	
Video Resolution	Main Stream	704 x 480, 704 x 240, 352 x 240	704 x 576, 704 x 288, 352 x 288
	Sub Stream	704 x 480, 704 x 240, 352 x 240	704 x 576, 704 x 288, 352 x 288
Frame Rate		30 fps	25 fps
		* The frame rate and the performance may vary depending on the number of connections and data bitrates (different scenes).	
Image Setting		Exposure Control, White Balance, Image Orientation, Backlight Compensation, Gamma	
Audio Compression		G.711	
Sensor Input		1 Input (Dry Contact)	
Alarm Output		1 Output (200mA 5V DC)	
Network			
Interface		10/100 Ethernet	
Protocol		HTTP, TCP, UDP, SMTP, FTP, DHCP, NTP, UPnP, DynDNS, 3GPP/ISMA, RTSP, PSIA	
Mechanical			
Camera Angle Adjustment	Pan	-175° ~ 175°	
	Tilt	-45° ~ 90°	
Connectors	Power	2-pin terminal block, PoE	
	Ethernet	RJ-45	
	Audio	1 In (Using a built-in or an externally connected microphone) 1 Out (Stereo phone jack, 3.5 mm / 0.14 in)	
	Local Storage	Micro SD / SDHC memory card slot	
	Digital I/O	3-pin terminal block	
LED Indicator		2 LEDs: Power and Status	
General			
Environment Temperature		-10 °C ~ 50 °C / 14 °F ~ 122 °F	
Humidity		10% to 90% (no condensation)	
Power Source		12V DC / 24V AC / PoE	
Max. Power Consumption		12 W	
Dimensions	With mounting base and cover	168 x 135.2 mm / 6.61 x 5.32 in	
	Without mounting base and cover	124.55 x 133.3 mm / 4.9 x 5.25 in	
Weight		490 g / 1.08 lb	
Regulatory		CE, FCC, C-Tick, RoHS compliant	

Power over Ethernet	
PoE Standard	IEEE 802.3af Power over Ethernet / PSE
PoE Power Supply Type	End-Span
PoE Power Output	Per Port 48V DC, 350mA. Max. 15.4 watts
Web Interface	
Installation Management	Web-based configuration
Maintenance	Firmware upgrade through Web Browser or Utility
Access from Web Browser	Camera live view, video recording, change video quality, bandwidth control, image snapshot, audio, Wide Angle Lens Dewarping, Picture in Picture, Picture and Picture, Privacy Mask
Language	Bulgarian / Czech / Danish / Dutch / English / French / German / Greek / Hebrew / Hindi / Hungarian / Indonesian / Italian /Japanese / Lithuanian / Norwegian / Persian / Polish / Portuguese / Romanian / Russian / Serbian / Simplified Chinese / Slovakian / Slovenian / Spanish / Thai / Traditional Chinese / Turkish * Bulgarian, Dutch, Greek, Hindi, Indonesian, Lithuanian, Norwegian, Persian, Romanian, Slovakian, Slovenian, Thai and Turkish are only supported in V1.08 or later.
Applications	
Network Storage	GV-NVR, GV-System, GV-Backup Center, GV-Recording Server * GV-Backup Center and GV-Recording Server are supported in V1.08 or later
Mobile Phone support	GV-AView for Android Smartphone, GV-Eye HD for iPad, GV-Eye for iPhone and iPod Touch, GV-GView for Windows PDA, GV-MSView for Windows Smartphone, GV-SSView for Symbian Smartphone, 3G-enabled phone.
Live Viewing	IE , GV-MultiView
CMS Server support	GV-Control Center, GV-Center V2, GV-VSM

Note: Specifications are subject to change without notice.