GV-SD200-S Outdoor Speed Dome

- 2 MP progressive scan CMOS
- 18x Optical Zoom
- 8x Digital Zoom
- H.264 and MJPEG
- Full HD Real-time Resolution
- Two-way audio support on Web interface
- Removable IR Cut Filter
- Motion Detection
- Wide Dynamic Range (WDR)
- Digital Noise Reduction
- IP66 Rating for outdoor environment

* No SD/SDHC card slot & local storage function for Argentina

INTRODUCTION

The full HD GV-IP Speed Dome provides variable pan/tilt speeds ranging from a fast patrol of 400° per second to a slow rotation of 5° per second with 0.225° pan accuracy for fast and accurate tracking ability. The 360° endless rotation and -10°~190° tilt travel can track objects passing directly beneath the GV-IP Speed Dome. A maximum of 256 preset points can be programmed for precise location of target areas, and users can also define 8 sequences, 4 auto-pan modes and 4 cruise routes for the Dome to operate automatically.

The GV-IP Speed Dome provides 4 alarm inputs and 2 alarm relay outputs, and the alarm management can be done through the network as well.

Overview

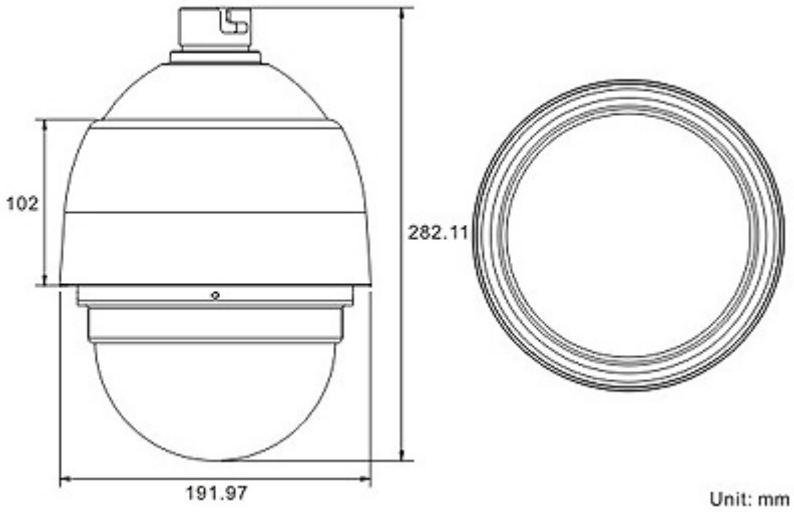

SPECIFICATIONS

Camera		
Sensor		1/2.8" Progressive Scan CMOS Sensor
Optical Zoom		18X
Digital Zoom		1~8x variable
Focal Length		4.7 ~ 84.6 mm
Focus Mode		Auto / Manual
White Balance		Auto/ Indoor/ Outdoor/ ATW
Iris Control		Auto / Manual
Electronic Shutter		1/30 ~ 1/10000 sec.
AGC control		Auto / Manual
Back Light		On / Off
Minimum Illumination	Color	0.05 lux at F/1.6
	B/W	0.01 lux at F/1.6
Video		
Video Codec		H.264, MJPEG
Video Streaming		Single Stream
Video Resolution	4:3	1024 x 768, 800 x 600, 640 x 480
	16:9	1920 x 1080, 1280 x 720
	5:4	1280 x 1024
	D1	720 x 576 / 720 x 480
	CIF	352 x 288 / 352 x 240
Frame Rate		30/25 fps (60/50 Hz) at 1920 x 1080; 30/25 fps (60/50 Hz) at 1280 x 720
Audio		
Audio input/output		Two-way audio on Web interface
Audio Codec		G.711
Network		
Interface		10/100 Mb Ethernet (RJ-45)
Protocol		IPv4, TCP/IP, UDP, RTP, RTSP, HTTP, HTTPS, ICMP, FTP, SMTP, DHCP, UPnP, IGMP, SNMP, QoS, ONVIF
Mechanical		
Temperature Detector		No
Connectors	Power	3-pin terminal block
	Ethernet	Ethernet (10/100 Base-T), RJ-45 Connector
	Audio	1 in 1 out (terminal block)
	Digital I/O	4 in 2 out (12-pin terminal block)
	Local Storage	Micro SD/SDHC memory card slot (for Class 6 card or above)
Web Interface		
Installation Management		Web-based configuration
Maintenance		Firmware upgrade through Web Browser or IP Device Utility
Language		English, French, German, Italian, Japanese, Korean, Portuguese, Russian, Simplified Chinese, Spanish and Traditional Chinese
Operation		
Pan Travel		360° endless
Tilt Travel		-10° ~ 190°
Manual Speed		0.5° ~ 90°/s
Presets		256
Preset Accuracy		0.225°
Preset Speed		5°~400°/s
Sequence		8
Auto Pan		4
Cruise		8
Privacy Mask		16
Proportional Pan & Tilt		On/Off (Pan and tilt speed proportional to zoom ratio)
Resume after Power loss		Yes
Home Function		Preset, Sequence, Auto pan, Cruise
Auto Flip		Digital / Mechanical / Off
Digital Slow Shutter		On / Off
Motion Detection		On / Off

Wide Dynamic Range	On / Off
Day/Night: IR Cut Filter	Auto / Manual
Digital Noise Reduction	On / Off
Digital Alarm Input	4
Digital Alarm Output	2
Alarm Reaction	Preset, Sequence, Auto pan, Cruise
General	
Operating Temperature	-40°C ~ 50°C / -40°F ~ 122°F
Dimensions	Ø191.97 x 228.1 mm / 7.55 x 11.1 in (with sunshield)
Weight	2.32 kg / 5.11 lb
Power Source	AC24V ± 10%
Power Consumption	65 W (with sunshield)
Heater	On: -7˚C / 19.4˚F ; Off: 3˚C / 37.4˚F
Regulatory	CE, FCC, RoHS, IP66

Note: Specifications are subject to change without notice.

Accessory

Part Number	Number Name		Details
GV-MountD100	Straight Tube (25 cm)		Height: 250 mm / 9.8 in Diameter: 50 mm / 2 in Weight: 1 kg / 2.2 lb Supplied with rubber washer-8 x 1, pendent tube washer x 1, spring washer -8 x 1, waterproof rubber x 1, M8-12 screw x 1
GV-MountD101	Straight Tube (50 cm)		Height: 500 mm / 19.7 in Diameter: 50 mm / 2 in Weight: 1.8 kg / 4 lb Supplied with rubber washer-8 x 1, pendent tube washer x 1, spring washer -8 x 1, waterproof rubber x 1, M8-12 screw x 1
GV-MountD203 (w/o anti-drop wire)	Standard Pendent Mount		Dimensions (L x W x D): 348 x 104 x 138.6 mm / 13.7 x 4.1 x 5.5 in Weight: 1.5 kg / 3.3 lb Supplied with rubber washer-8 x 1, pendent tube washer x 1, spring washer-8 x 1, M8-12 screw x 1
GV-MountD300	Corner Plate Mount		Dimensions (L x W x D): 222 x 204 x 117 mm / 8.7 x 8 x 4.6 in Weight: 2 kg / 4.4 lb Supplied with washer-8 x 4, spring washer x 4, M8-16 screw x 4, M8 nut x 4
GV-MountD301	Corner Thin Box Mount		Dimensions (L x W x D): 300 x 164 x 222 mm / 11.8 x 6.5 x 8.7 in Weight: 3.05 kg / 6.7 lb Supplied with washer x 4, M8-16 screw x 4, spring washer x 4 Power Box can be set inside the thin box.
GV-MountD400	Pole Thin Box Mount		Dimensions (L x W x D): 291 x 136 x 242 mm / 11.5 x 5.4 x 9.5 in Weight: 3.1 kg / 6.9 lb Supplied with M8-16 screw x 4, washer x 4, spring washer x 4, stainless steel straps x 4 Power Box can be set inside the thin box.

GV-MountD401	Pole Thin Direct Mount		Dimensions (L x W x D): 232 x 136 x 60 mm / 9.1 x 5.4 x 2.4 in Diameter: 112~114 mm / 4.4 ~ 4.5 in Weight: 0.7 kg / 1.6 lb Supplied with stainless steel strap x 4, M8-16 screw x 4, washer x 4
GV-MountD302	Wall Box Mount		Dimensions (L x W x D): 270 x 166 x 95 mm / 10.6 x 6.5 x 3.7 in Weight: 2.2 kg / 4.84 lb Supplied with M8-16 screw x 4, washer x 4, spring washer x 4 Power Box can be set inside the wall box.
GV-MountD605	5.8" Smoke Cover		Diameter: 145 mm / 5.7 in
GV-MountD500	Power Box (Input: 110 -115V AC)		Dimensions (L x W): 185.5 x 147 mm / 7.3 x 5.8 in Weight: 2.6 kg / 5.8 lb Output: 24VAC 72VA
GV-MountD501	Power Box (Input: 220 -230V AC)		Dimensions (L x W): 185.5 x 147 mm / 7.3 x 5.8 in Weight: 2.6 kg / 5.8 lb Output: 24VAC 72VA
E57-A1030-100	Power Adaptor (Input: 100-115V AC)		Dimensions (L x W): 131 x 90 mm / 5.16 x 3.54 in Weight: 1.47 kg / 3.23 lb Output: 24V AC 3A
E57-A2030-110	Power Adaptor (Input: 220-230V AC)		Dimensions (L x W): 131 x 90 mm / 5.16 x 3.54 in Weight: 1.47 kg / 3.23 lb Output: 24V AC 3A
GV-MountD202 (w/o anti-drop wire)	Mini Pendent Mount	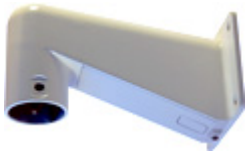	(included in packing list) Dimensions (L x W x D): 184 x 104 x 115.2 mm / 7.24 x 4.09 x 4.54 in Weight: 0.6 kg / 1.2 lb Supplied with rubber washer-8 x 1, pendent tube washer x 1, spring washer-8 x 1, M8-12 screw x 1
GV-MountD902	Outdoor Mounting Kit		(included in packing list) Height: 73 mm / 2.87 in Diameter: 142.58 mm / 5.6 in Weight: 0.26 kg / 0.57 lb Supplied with Waterproof Rubber, T5/T10 Hexagon Key, M5 Stainless Screw x1, M5 Stainless Tamperproof Screw x1

Packing List

Dome Camera

Optical Cover

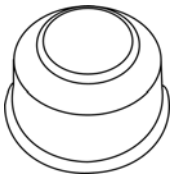

Waterproof Rubber

Outdoor Mounting Kit

(GV-MountD902)

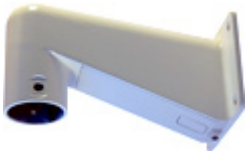

Mini Pendent Mount (GV-MountD202)

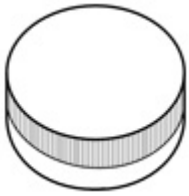

Lubricant

Security Torx

Software DVD x 1

Terminal Block

Short Screw (x1)