GV-MDR520 5MP H.264 Mini Fixed Rugged Dome

- 1/2.5" progressive scan CMOS
- Megapixel lens
- Dual video streams: Stream 1 from H.264 and MJPEG; Stream 2 from H.264, MPEG4 and MJPEG
- Up to 10 frames per second in megapixel resolution (2560 x 1920)
- IK7 rating
- IP66 rating
- 3-axis mechanism: pan (-45° ~ +45°), tilt (0° ~ 90°), rotate (0° ~ 360°)
- Built-in microphone
- Motion detection
- Tampering alarm
- Privacy mask
- Text overlay
- IP address filtering
- Endurable to low environment temperatures (-20°C ~ 50°C / -4°F ~ 122°F)
- Supports iPhone, iPad, Android & 3GPP
- 31 languages on Web interface

* No SD/SDHC card slot & local storage function for Argentina.

Active Tampering Alarm

Tampered

Focus Change

Camera Shift

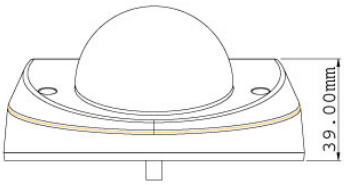

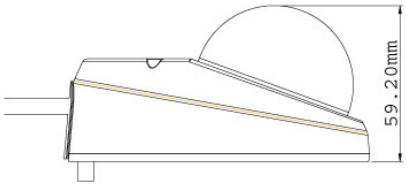

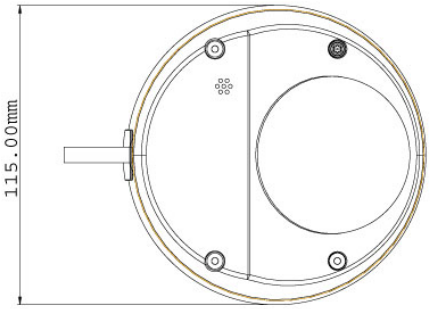

SPECIFICATIONS

Camera		
Image Sensor		1/2.5" progressive scan CMOS
Picture Elements		2048 (H) x 1536 (V)
Minimum Illumination	Color BW	0.5 Lux at F/2.8
Shutter Speed		Automatic, Manual (1/5 ~ 1/8000 sec)
White Balance		Automatic, Manual (2800K ~ 8500K)
Gain Control		Automatic
S/N Ratio		50 dB
BLC		Yes

Lens		
Megapixel		Yes
Day/Night		Yes (electronic)
Iris		Fixed
Focal Length		2.54 mm
Maximum Aperture		F/2.8
Mount		M12, Pitch 0.5 mm
Image Format		1/2.5"
Operation	Focus	No
	Zoom	No
	Iris	Fixed
Operation		
Video Compression		H.264, MPEG4, MJPEG
Video Streaming		Streaming 1 from H.264 and MJPEG, Streaming 2 from H.264, MPEG4 and MJPEG
Frame Rate		10 fps at 2560 x 1920 * The frame rate and the performance may vary depending on the number of connections and data bitrates (different scenes).
Image Setting		Brightness, Contrast, Saturation, Sharpness, Gamma, White Balance, Flicker-less 50/60 Hz, Image Orientation, Shutter Speed, Backlight Compensation, D/N sensitivity
Audio Compression		G.711, AAC (16 kHz / 16 bit) * AAC is only supported by GV-System V8.5 or later
Video Resolution		
Main Stream	4:3	2560 x 1920, 2048 x 1536, 1600 x 1200, 1280 x 960, 640 x 480, 320 x 240
	16:9	1920 x 1080, 1280 x 720, 640 x 360, 448 x 252
	5:4	1280 x 1024, 640 x 512, 320 x 256
Sub Stream	4:3	640 x 480, 320 x 240
	16:9	640 x 360, 448 x 252
	5:4	640 x 512, 320 x 256
Network		
Interface		10/100 Ethernet
Ethernet Protocol		HTTP, HTTPS, TCP, UDP, SMTP, FTP, DHCP, NTP, UPnP, DynDNS, 3GPP/ISMA, RTSP, PSIA, SNMP, QoS (DSCP)
Mechanical		
Lens Mounting		M12, Pitch 0.5 mm
Temperature Detector		Yes
Camera Angle Adjustment	Pan	-45° ~45°
	Tilt	0° ~ 90°
	Rotate	0° ~ 360°
Connectors	Power	PoE
	Ethernet	Ethernet (10/100 Base-T), RJ-45
	Audio	Built-in microphone
	Local Storage	Micro SD/SDHC memory card slot (for Class 6 card or above)
LED Indicator		4 LEDs: Link, ACT, Power, Status
General		
Environment Temperature		-20 °C ~ 50 °C / -4 °F ~ 122 °F
Humidity		10% to 90% (no condensation)
Power Source		PoE
Max. Power Consumption		4.2 W
Dimensions	Camera Body	ø 115 x 59.2 mm / 4.5 x 2.3 in
	Cable Length	1.054 m / 41.5 in
	Cable Diameter	ø 6.2 mm / 0.24 in
	Maximum Connector Diameter	ø 30 mm / 1.18 in
Weight		568 g / 1.3 lb
Protection Classification		IP66
Vandal Resistance		IK7
Regulatory		CE, FCC, C-Tick, EN50155, RoHS compliant

Power over Ethernet	
PoE Standard	IEEE 802.3af Power over Ethernet / PSE
PoE Power Supply Type	End-Span
PoE Power Output	Per Port 48V DC, 350mA. Max. 15.4 watts
Web Interface	
Installation Management	Web-based configuration
Maintenance	Firmware upgrade through Web Browser or Utility
Access from Web Browser	Camera live view, video recording, change video quality, bandwidth control, image snapshot, digital I/O control, audio, Wide Angle Lens Dewarping, Picture in Picture, Picture and Picture, Privacy Mask, Text Overlay
Language	Arabic / Bulgarian / Czech / Danish / Dutch / English / Finnish / French / German / Greek / Hebrew / Hungarian / Indonesian / Italian /Japanese / Lithuanian / Norwegian / Persian / Polish / Portuguese / Romanian / Russian / Serbian / Simplified Chinese / Slovakian / Slovenian / Spanish / Swedish / Thai / Traditional Chinese / Turkish
Applications	
Network Storage	GV-NVR, GV-System, GV-Backup Center, GV-Recording Server
Mobile Phone support	GV-AView for Android Smartphone, GV-Eye HD for iPad, GV-Eye for iPhone and iPod Touch, GV-GView for Windows PDA, GV-MSView for Windows Smartphone, GV-SSView for Symbian Smartphone, 3G-enabled phone.
Live Viewing	IE , GV-MultiView
CMS Server support	GV-Control Center, GV-Center V2, GV-VSM

Note: Specifications are subject to change without notice.