Captur every detail

High Resolution Weatherproof 37x IR PTZ Dome Camera

SCP-2370RH

The SCP-2370RH is a high speed professional infrared PTZ camera that features a 37x optical zoom and built-in IR LEDs. The SCP-2370RH adjusts the infrared intensity to provide the appropriate amount of IR light at certain zoom ratios allowing it to capture details in the dark up to 328ft. The SCP-2370RH offers true day & night, motion detection, and delivers clear and vivid images. It is IP66 rated making the SCP-2370RH suitable for any challenging condition.

- High Resolution of 600TV Lines (Color), 700TV Lines (B/W)
- Min. Illumination 0 Lux @F1.6 (IR LED On), 0.2Lux @F1.6 (Color), 0.02Lux (B/W)
- Powerful 37x Zoom (3.5 ~ 129.5mm), Digital 16x
- True Day & Night (ICR), MD, SSNRIII (3D+2D Noise Reduction)
- IP66, Coaxial Control (Pelco-C), RS-485, 24V AC
- IR intensity adjustment with zooming in/out ratio

High Resolution Weatherproof 37x IR PTZ Dome Camera

SCP-2370RH

600TVL | 0 Lux | 37X Powerful Zoom | D&N ICR | IP66

Dimensions

Unit : mm (inch)

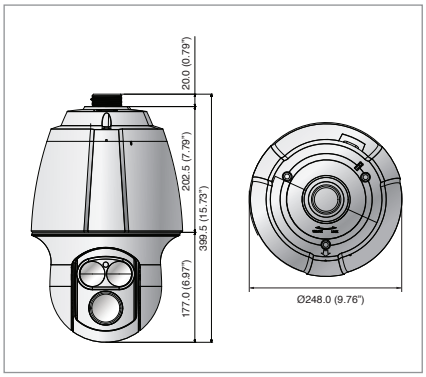

Specifications

	SCP-2370THN	SCP-2370THP
VIDEO		
Imaging Device	1/4" Super HAD II CCD	
Total Pixels	811(H) x 508(V)	795(H) x 596(V)
Effective Pixels	768(H) x 494(V)	752(H) x 582(V)
Scanning System	2 : 1 Interlace	
Synchronization	Internal / Line Lock	Internal / Line Lock
Frequency	H : 15.734KHz / V : 59.94Hz	H : 15.625KHz / V : 50Hz
Horizontal Resolution	Color : 600 TV lines / BW : 700 TV lines	
Min. Illumination	Color : 0 Lux @ F1.6 (IR LED On), 0.2Lux @ F1.6, 0.0004 Lux (Sens-up, 512x) B/W : 0.02 Lux @ F1.6, 0.00004 Lux (Sens-up, 512x)	
S / N Ratio	52dB (AGC off, Weight on)	
Video Output	CVBS : 1.0 Vp-p / 75Ω composite	
LENS TYPE		
Focal Length (Zoom Ratio)	3.5~129.5mm (Optical 37x)	
Max. Aperture Ratio	1:1.6 (Wide) ~ 3.9 (Tele)	
Angular Field of View	H : 55.5°(Wide) ~ 1.59°(Tele) / V : 42.5°(Wide) ~ 1.19°(Tele)	
Min. Object Distance	1.5m (59.06")	
Focus Control	Auto / Manual / One Shot	
Zoom Movement Speed	2.8 sec	
PAN / TILT		
Pan Range	360° Endless	
Pan Speed	Preset : 250°/sec / Manual : 0.024°/sec ~ 120°/sec (Proportional zoom ratio)	
Tilt Range	-5° ~ 185°	
Tilt Speed	Preset : 250°/sec / Manual : 0.024°/sec ~ 120°/sec (Proportional zoom ratio)	
Preset	255	
Preset Accuracy	±0.1°	
OPERATIONAL		
On Screen Display	English, Japanese, Spanish, French, Portuguese, Taiwanese, Korean	English, French, German, Spanish, Italian, Chinese, Russian, Polish, Czech,Turkish, Portuguese
Camera Title	Off / On (Displayed 12 characters)	
Day & Night	Auto (ICR) / Color / B/W	
Backlight Compensation	BLC / HLC / Off	
Contrast Enhancement	SSDR (Off/On)	
Digital Noise Reduction	SSNRIII(Off/On)	
Digital Image Stabilization	Off / On	
Motion Detection	Off / On	
Privacy Masking	Off / On (8 programmable zones)	
Sens-up (Frame Integration)	2x ~ 512x	
Gain Control	Off / Low / High	
White Balance	ATW / Outdoor / Indoor / Manual / AWC (1,700K° ~ 11,000K°)	
Electronic Shutter Speed	1/60 ~ 1/120,000 sec	1/50 ~ 1/120,000 sec
Digital Zoom	Off / On (2x ~ 16x)	
Digital Flip	Off / On	
Schedule	Day / Time	
Alarm	8 In 3 Out	
Communication	Coaxial Control (SPC-300 Compatible), RS-485/422	
Protocol	Coax : Pelco-C (Coaxitron) RS-485: SAMSUNG-T/E, PELCO-D/P, PANASONIC, BOSCH, HONEYWELL, VICON, AD, GE	
IR Distance	100m (850nm IR LED : 2EA)	
ENVIRONMENTAL		
Operating Temperature / Humidity	-50°C ~ +55°C (-58°F ~ +131°F) / Less than 100% RH	
Ingress Protection	IP66	
ELECTRICAL		
Input Voltage/Current	24V AC±10%	
Power Consumption	Max. 15W / 90W (Fan & Heater on)	
MECHANICAL		
Color / Material	Ivory, Aluminum	
Dimension (WxHxD)	Ø248×399.5mm (Ø9.76" x 15.73")	
Weight	6Kg (13.23lb)	

Design and specifications are subject to change without notice.

SAMSUNG

eco RoHS compliant

The Eco mark represents Samsung Techwin's will to create environment-friendly products,and indicates that the product satisfies the EU RoHS Directive.

■DISTRIBUTED BY